Bluetooth Module Datasheet

Model: AR-6302T

Version: V1.0

2022-02-18

Shenzhen Every Interconnect Technologies Co., Ltd.

TEL: (0755)23410907

Fax: (0755)23410907

E-mail: guang.ma@every-connect.com

Add: 4 / F, building D, Guangming Zhizao hi tech Industrial Park,

ZhenMeiCommunity, Xinhu Street, Guangming District, Shenzhen

Release Record

Version	Release Date	Comments
V1.0	2022-02-18	Init

List of Contents

1 Introduction

AR-6302T module is a 5-in-1 solution that supports Bluetooth V5.0, U disk, and TF card playback. The highlights of the module are support for lossless music playback, simple and clear serial control functions, support for BLE transparent transmission, and SPP transparent transmission function. Greatly reduces the difficulty of developing embedded Bluetooth in other products.

1.1 Bluetooth Features

- CMOS single-chip fully-integrated radio and baseband
- Bluetooth 5.0 version, support HFP / A2DP / AVRCP / HSP / GAVDP / IOP / SPP / BLE, the distance is about 10M
- 16-bit Stereo DAC with headphone amplifier, SNR >= 95dB
- Bluetooth Piconet and Scatternet support
- Meet class2 and class3 transmitting power requirement
- Support GFSK and π/4 DQPSK all paket types
- Provides +2dbm transmitting power
- receiver with -89dBm sensitivity
- Support MP3, WAV, WMA, FLAC, AAC, APE format lossless full decoding
- Maximum support 128G U disk and TF card
- UART and USB programming and data interfaces
- Support breakpoint memory and track memory function
- Support Bluetooth audio transmission to connect mobile phones to transfer music, support playback pause, up and down song switching
- Support Bluetooth call function, user can set to cancel, support answer, hang up, callback, refuse to accept and other functions
- Class2 4dbM frequency range is 2.4G--2.480G
- Support BLE transparent transmission function, connect "BT401-BLE" separately; support SPP transparent transmission function
- Support a2dp\avctp\avdtp\avrcp\hfp\spp\smp\att\gap\gatt\rfcomm\sdp\l2cap profile

1.2 Applications

1）Bluetooth audio products：

- Bluetooth stereo speaker
- Bluetooth stereo headset
- Bluetooth TWS speaker
- Bluetooth TWS headset
- Speakerphones
- Bluetooth Speaker
- Bluebooth for cars

2）Bluetooth data transmission products：

- Smart door lock
- Vehicle OBD detection
- Smart car
- Printer
- Medical equipment data collection

3）Bluetooth data transmission + audio products：

- Bluetooth music light
- Bluetooth radio

  Note: It is not suitable to choose this solution for ultra-low power consumption

1.3 Additional Functionality

- Support for multi-language programmable audio prompts
- Multipoint support HFP connection to 2 handsets for voice
- Multipoint support A2DP connection to 2 A2DP source devices for music playback
- Talk-time extension
- Fast charging support up to 200mA with no external components. Higher charge currents using external pass device.
- Slim module with 21mm x 14.7mm

2 General Specification

Table 1: General Specification

Bluetooth Specification	
Model Name	AR-6302T
Product Description	Bluetooth v5.0 Class2 Module
Bluetooth Standard	Bluetooth v5.0
Chipset	AC6926A
Dimension	21mm x 14.7mm
Temperature	
Operating temperature	-20℃ to +70℃
Storage temperature	-65℃ to +150℃
Electrical Specifications	
Supply Voltage	2.80~4.25V
Power Consumption in A2DP slave mode with no load and playing peak noise	14mA
Modulation	GFSK/π/4 DQPSK/8DPSK
Frequency Range	2402～2480MHz
Maximum RF Transmit Power	4dBm
Receive Sensitivity	-84dBm

3 Pin Definition

3.1 Pinout Diagram and package dimensions

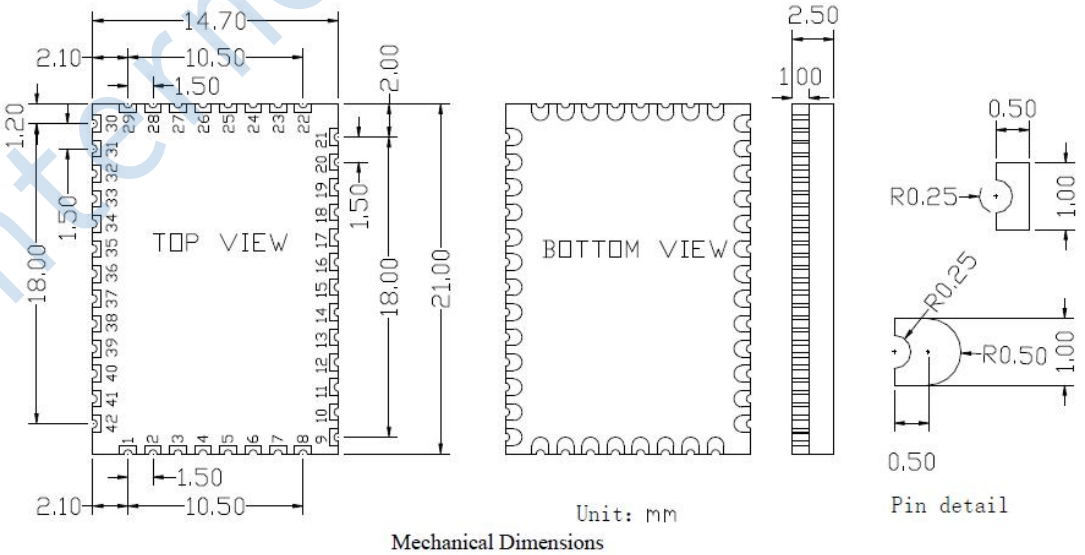

Figure 1

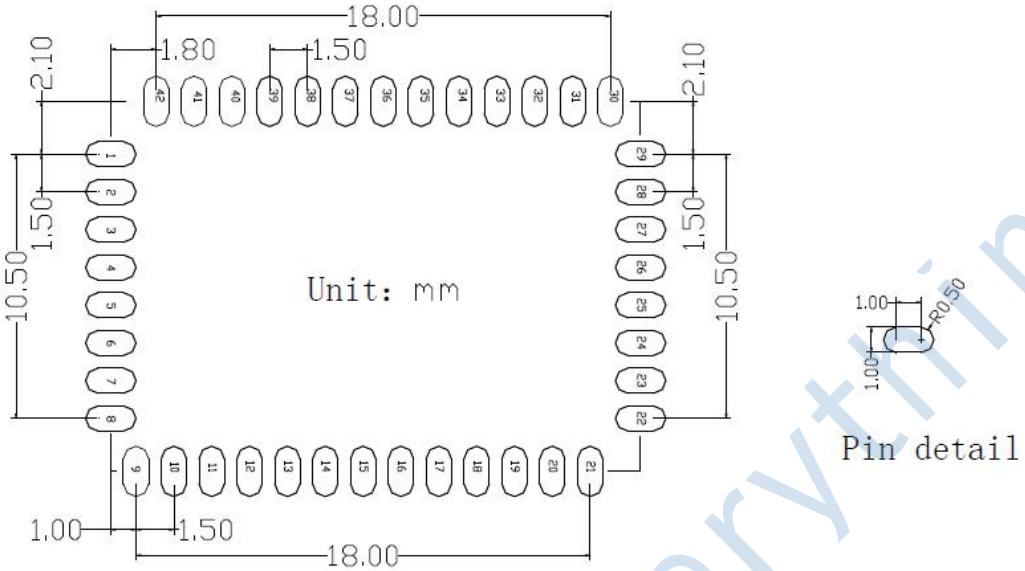

Recommended PCB layout footprint

Figure 2

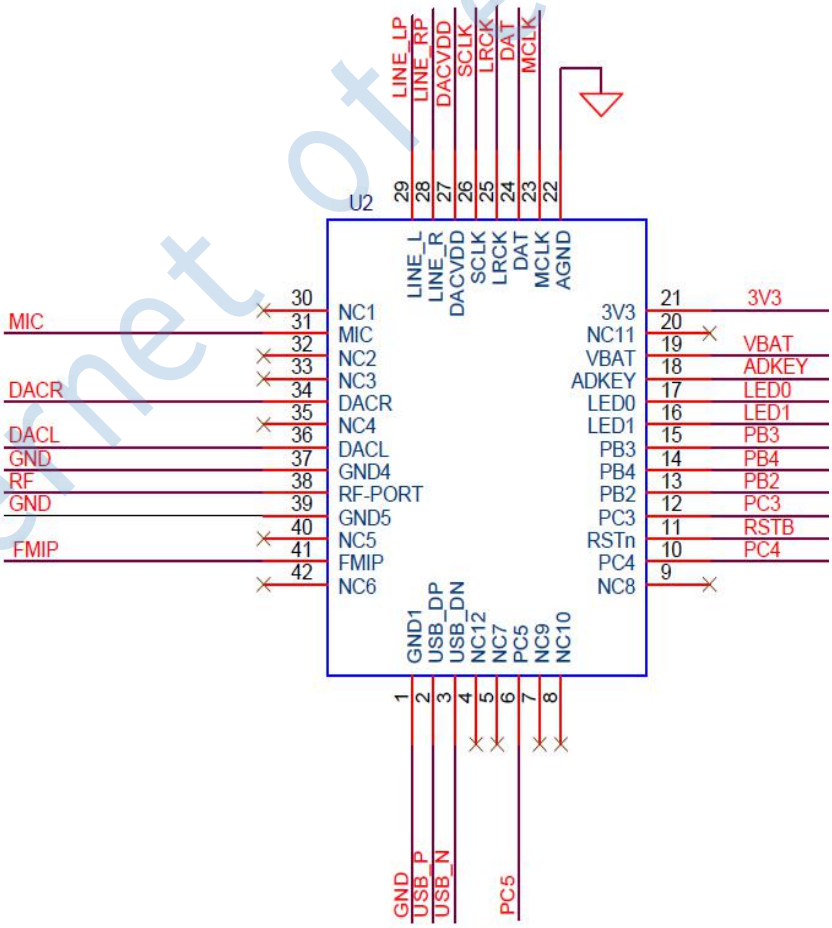

Figure 3

3.2 Pin Definition

Table 2: Pin Definition

Pin	Symbol	I/O Type	Description
1	GND1	Ground	Ground
2	USB_DP	Bidirectional	USB data plus
3	USB_DN	Bidirectional	USB data minus
4	NC12	N.C	Not Connected
5	NC7	N.C	Not Connected
6	PC5	I/O (GPIO)	PWMH1L SD1CLKA：SD1 Clock(A); SPI1DOB：SPI1 Data Out(B); UART2RXD：Uart2 Data In(B); IIC_SDA_B：IIC SDA(B);
7	NC9	N.C	Not Connected
8	NC10	N.C	Not Connected
9	NC8	N.C	Not Connected
10	PC4	I/O (GPIO)	SD1CMDA：SD1 Command(A); SPI1CLKB：SPI1 Clock(B); UART2TXD：Uart2 Data Out(B); IIC_SCL_B：IIC SCL(B);
11	RSTn	Input with strong pull-up	Reset if low. Pull low for minimum 5ms to cause a reset.
12	PC3	I/O (GPIO)	SD1DAT0A：SD1 Data0(A); SPI1DIB：SPI1 Data In(B); UART0RXC：Uart0 Data In(C); TMR3：Timer3 Clock Input; ADC10：ADC Input Channel 10;
13	PB2	I/O (GPIO)	UART2TXC：Uart2 Data Out(C); SPI2DIA：SPI2 Data In(A); SPI0_CLKB：SPI0 Clock(B); Touch2：Touch Input Channel 2;
14	PB4	I/O (GPIO)	PWM3：Timer3 PWM Output; AMUX0L：Simulator Channel0 Left; SPI1CLKA：SPI1 Clock(A); SD0CMDB：SD0 Command(B); ADC8：ADC Input Channel 8; SPI0_DAT2AB(2)：SPI0 Data2(AB); Touch4：Touch Input Channel 4;
15	PB3	I/O (GPIO)	PWM2：Timer2 PWM Output; UART2RXC：Uart2 Data In(C); SPI1DIA：SPI1 Data In(A); SD0DAT0B：SD0 Data0(B); AMUX2R：Simulator Channel2 Right; SPI0_DAT3AB(3)：SPI0 Data3(AB); Touch3：Touch Input Channel 3;
16	LED1	Open drain output	LED driver

17	LED0	Open drain output	LED driver（PR1）
18	ADKEY		AD button. It can be left unconnected.
19	VBAT	Battery positive terminal	Power supply input for 2.8~4.2V
20	NC11	N.C	Not Connected
21	3V3	3.3v power output	The LDO output inside the chip, pay attention to the output. The external load cannot exceed Over 80mA. Try not to use it.
22	AGND	Ground	Ground
23	MCLK	I2S MCLK	I2S MCLK
24	DAT	I2S DAT	I2S DAT
25	LRCK	I2S LRCK	I2S L/R Channel Clock
26	SCLK	I2S SCLK	I2S SCLK（PB0）
27	DACVDD	Power	The bias voltage of the chip DAC.
28	LINE_RP	Analogue	Alternative function: ■ Differential audio line input right
29	LINE_LP	Analogue	Alternative function: ■ Differential audio line input left
30	NC1	N.C	Not Connected
31	MIC	Analog input	Microphone input
32	NC2	N.C	Not Connected
33	NC3	N.C	Not Connected
34	DACR	O	Right channel output
35	NC4	N.C	Not Connected
36	DACL	O	Left channel output
37	GND4	Ground	Ground
38	RF-PORT	Analog	Transceiver input/output line
39	GND5	Ground	Ground
40	NC5	N.C	Not Connected
41	FMIP	I	
42	NC6	N.C	Not Connected

4 Electrical Characteristics

4.1 IO Input/Output Electrical Logical Characteristics

Table 3: IO Input/Output Electrical Logical Characteristics

IO input characteristics						
Symbol	Parameter	Min	Typ	Max	Unit	Test
V_{IL}	Low-Level Input Voltage	-0.3	—	0.3*VDDIO	V	VDDIO = 3.3V

V_{IH}	High-Level Input Voltage	0.7*VDDIO	—	0.3+VDDIO	V	VDDIO = 3.3V
IO output characteristics						
V_{OL}	Low-Level Output Voltage	—	—	0.33	V	VDDIO = 3.3V
V_{OH}	High-Level Output Voltage	2.7	—	—	V	VDDIO = 3.3V

4.2 DAC Characteristics

Table 4: DAC Characteristics

Parameter	Min	Typ	Max	Unit	Test Conditions
Frequency Response	20	_	20K	Hz	1KHz/0dB 10Kohm loading With A-Weighted Filter
THD+N	_	-69	_	dB	
S/N	_	95	_	dB	
Crosstalk		-80	_	dB	
Output Swing		1		Vrms	
Dynamic Range		90		dB	1KHz/-60dB 10Kohm loading With A-Weighted Filter
DAC Output Power	11		_	mW	32ohm loading

4.3 USB Interface

AR-6302T has a full-speed (12 Mbps) USB interface for communicating with other compatible digital devices.

The USB interface on AR-6302Tacts as a USB peripheral, responding to requests from a master host controller.

AR-6302T contains internal USB termination resistors and requires no external resistors.

AR-6302T supports the Universal Serial Bus Specification, Revision v2.0 (USB v2.0 Specification).

4.4 UART Interface

AR-6302T has a UART serial interface that provides a simple mechanism for communicating with other serial devices using the RS232 protocol, including for test and debug.

When AR-6302T is connected to another digital device, UART_RX and UART_TX transfer data between the 2 devices.

UART configuration parameters, such as baud rate and packet format, are set using the AR-6302T firmware.

NOTE: To communicate with the UART at its maximum data rate using a standard PC, the PC requires an accelerated serial port adapter card.

The use of UART and USB are mutually exclusive.

Table 5: Possible UART Settings

Parameter		Possible Values
Baud rate	Minimum	1200 baud (≤2%Error)
		9600 baud (≤1%Error)
	Maximum	4Mbaud (≤1%Error)
Flow control		None
Parity		None, Odd or Even
Number of stop bits		1 or 2
Bits per byte		8

Table 6 lists commonly used baud rates and their associated error values.

Table 6: Standard Baud Rates

Baud rate	PS Key value(bits per second)	Error
1200	1200	1.73%
2400	2400	1.73%
4800	4800	1.73%
9600	9600	-0.82%
19200	19200	0.45%
38400	38400	-0.18%
57600	57600	0.03%
76800	76800	0.14%
115200	115200	0.03%
230400	230400	0.03%
460800	460800	-0.02%
921600	921600	0.00%
1382400	1382400	-0.01%
1843200	1843200	0.00%
2764800	2764800	0.00%
3686400	3686400	0.00%

5 BT Characteristics

5.1 Transmitter

Table 7: Basic Data Rate

Parameter		Min	Typ	Max	Unit	Test Conditions
RF Transmit Power			0	4	dBm	25℃, Power Supply Voltage=5V 2441MHz
RF Power Control Range			20		dB	
20dB Bandwidth			950		KHz	
Adjacent Channel Transmit Power	+2MHz		-40		dBm	
	-2MHz		-38		dBm	
	+3MHz		-44		dBm	
	-3MHz		-35		dBm	

Table 8: Enhanced Data Rate

Parameter		Min	Typ	Max	Unit	Test Conditions
Relative Power			1.2		dB	25℃, Power Supply Voltage=5V 2441MHz
π/4 DQPSK Modulation Accuracy	DEVM RMS		6		%	
	DEVM 99%		10		%	
	DEVM Peak		15		%	
Adjacent Channel Transmit Power	+2MHz		-40		dBm	
	-2MHz		-38		dBm	
	+3MHz		-44		dBm	
	-3MHz		-35		dBm	

5.2 Receiver

Table 9: Basic Data Rate

Parameter		Min	Typ	Max	Unit	Test Conditions
Sensitivity			-89		dBm	25℃, Power Supply Voltage=5V 2441MHz
Co-channel Interference Rejection			-13		dB	
Adjacent Channel Interference Rejection	+1MHz		+5		dB	
	-1MHz		+2		dB	
	+2MHz		+37		dB	
	-2MHz		+36		dB	
	+3MHz		+40		dB	
	-3MHz		+35		dB	

Table 10: Enhanced Data Rate

Parameter		Min	Typ	Max	Unit	Test Conditions
Sensitivity			-89		dBm	25℃, Power Supply Voltage=5V 2441MHz
Co-channel Interference Rejection			-13		dB	
Adjacent Channel Interference Rejection	+1MHz		+5		dB	
	-1MHz		+2		dB	
	+2MHz		+37		dB	
	-2MHz		+36		dB	
	+3MHz		+40		dB	
	-3MHz		+35		dB	

6 Recommended PCB Layout and Mounting Pattern

Placement and PCB layout are critical to optimize the performances of a module without on-board antenna designs. The trace from the antenna port of the module to an external antenna should be 50 and must be as short as possible to avoid any interference into the transceiver of the module. The location of the external antenna and RF-IN port of the module should be kept away from any noise sources and digital traces. A matching network might be needed in between the external antenna and RF-IN port to better match the impedance to minimize the return loss.

As indicated in figure 12 below, RF critical circuits of the module should be clearly separated from any digital circuits on the system board. All RF circuits in the module are close to the antenna port. The module, then, should be placed in this way that module digital part towards your digital section of the system PCB.

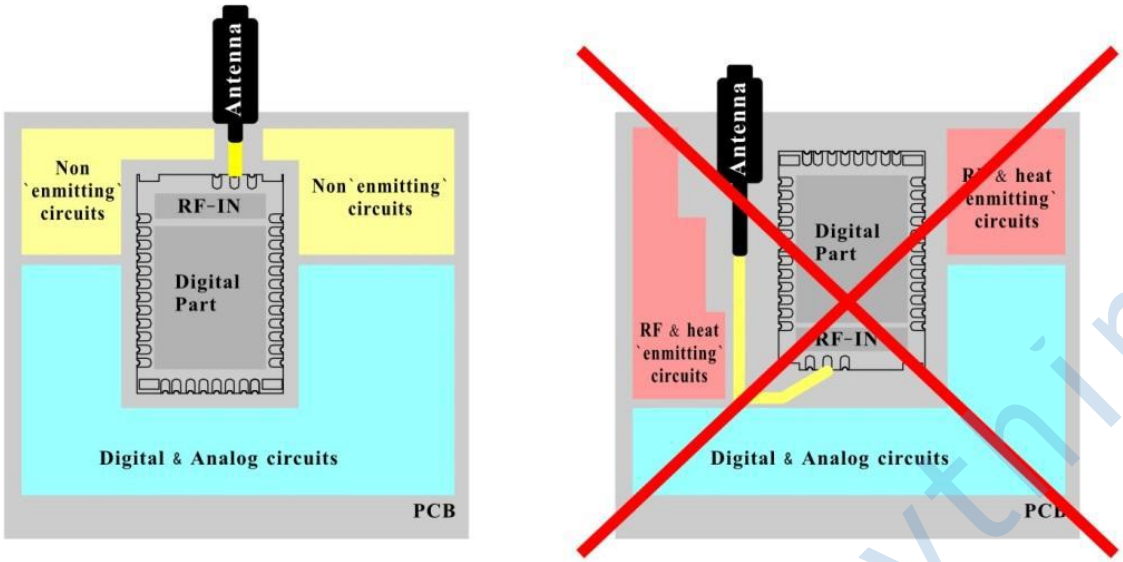

Figure 4: Placement the Module on a System Board

6.1 Input/output Terminal Characteristics

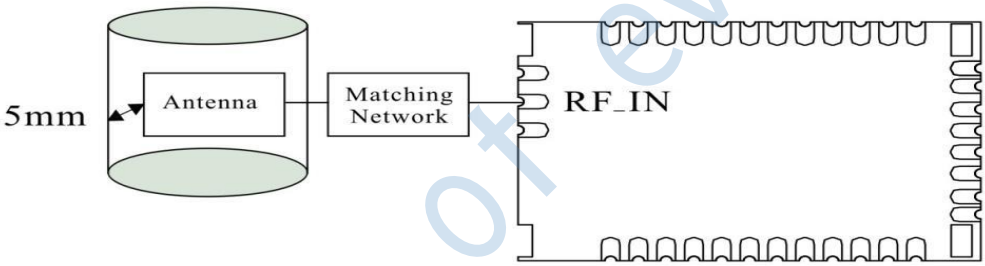

Figure 5: Leave 5mm Clearance Space from the Antenna

General design recommendations are:

- The length of the trace or connection line should be kept as short as possible.
- Distance between connection and ground area on the top layer should at least be as large as the dielectric thickness.
- Routing the RF close to digital sections of the system board should be avoided.
- To reduce signal reflections, sharp angles in the routing of the micro strip line should be avoided. Chamfers or fillets are preferred for rectangular routing; 45-degree routing is preferred over Manhattan style 90-degree routing.

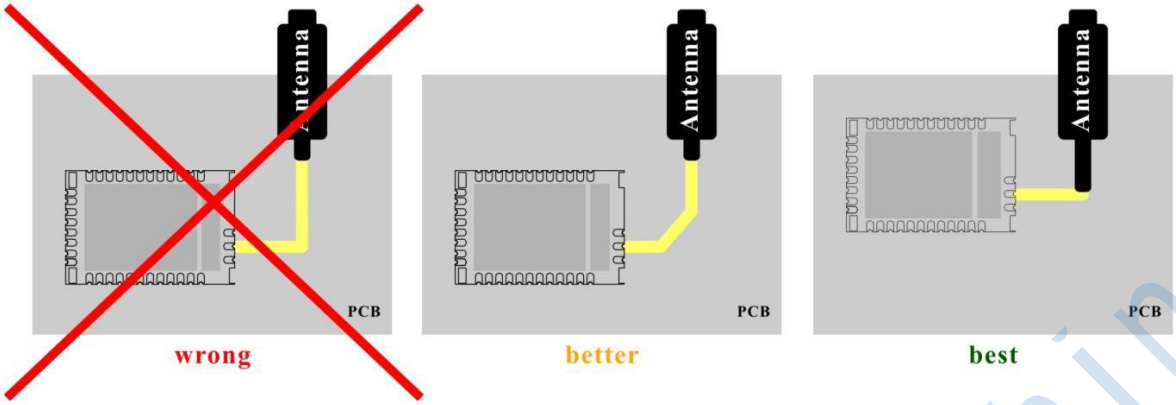

Figure 6: Recommended Trace Connects Antenna and the Module

- Routing of the RF-connection underneath the module should be avoided. The distance of the micro strip line to the ground plane on the bottom side of the receiver is very small and has huge tolerances. Therefore, the impedance of this part of the trace cannot be controlled.
- Use as many vias as possible to connect the ground planes.

7 Recommended reflow temperature profile

1) Follow: IPC/JEDEC J-STD-020 C

2) Condition:

Average ramp-up rate(217℃ to peak): 1～2℃/sec max.

Preheat: 150～200C, 60～180 seconds

Temperature maintained above 217℃: 20～40 sec

Peak temperature: 250+0/-5℃ or 260+0/-5℃

Ramp-down rate: temperature: 8 minutes max

Cycle interval: 5 minus

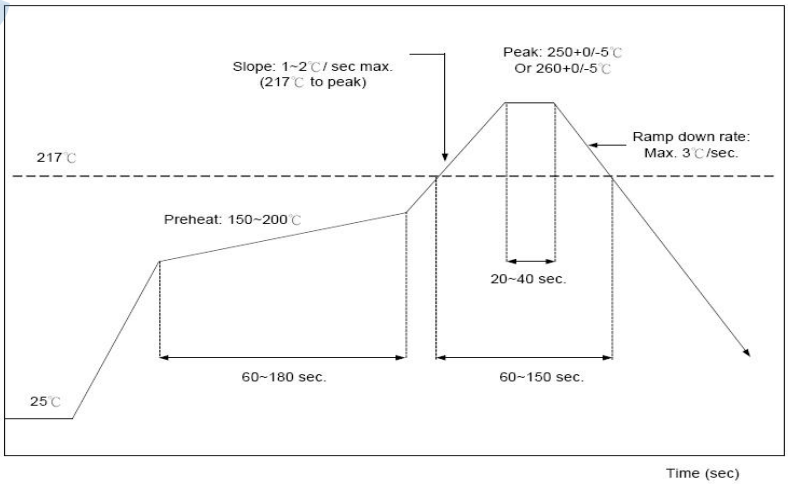

CAUTION

This bag contains
MOISTURE-SENSITIVE DEVICES

LEVEL
3

If Blank,see adjacent
bar code label

1. Calculated sheif life in sealed bag:12 months at < 40 ℃ and < 90% relative humidity (RH)
2. Peak package body temperature: 260 ℃
   If Blank, see adjacent bar code label
3. After bag is opened.devices that will be subjected to reflow solder or other high temperature process must
   a) Mounted within: 168 hours of factory
   If Blank, see adjacent bar code label
   conditions ≤ 30 ℃ / 60 %
   b) stored at < 10%RH
4. Devices require bake, before mounting, if :
   a) Humidity Indicator Card is > 10 %when read at 23 ± 5 ℃
   b) 3a or 3b not met.
5. If baking is required, devices may be baked for 48 hours at 125 ± 5 ℃

Note: If device containers cannot be subjected to high temperature or shorter bake times are desired,
reference IPC /JEDEC J-STQ-033 for bake procedure

Bag Seal Date: _____ .
If Blank,see adjacent bar code label

Note:Level and body temperature defined by IPC /JEDEC J-STQ-020

The module Must go through 125℃ baking for at least 9 hours before SMT AND IR reflow process!

若拆封后未立即上线，艾瑞建议让下次上线前务必以 125℃烘烤 9 小时以上！

IMPORTANT NOTICE

Shenzhen Every Interconnect Technologies Co., Ltd (AR) reserve the right to make changes to their products or to discontinue any product or service without notice, and advise customers to obtain the latest version of relevant information to verify, before placing orders, that information being relied on is current. All products are sold subject to the AR terms and conditions of sale supplied at the time of order acknowledgement, including those pertaining to warranty, patent infringement, and limitation of liability.

AR warrants performance of its products to specifications applicable at the time of sale in accordance with AR's standard warranty. Testing and other quality control techniques are utilized to the extent AR deems necessary to support this warranty. Specific testing of all parameters of each device is not necessarily performed, except those mandated by government requirements.

In order to minimize risks associated with customer applications, adequate design and operating safeguards must be used by the customer to minimize inherent or procedural hazards. AR products are not authorized for use as critical components in life support devices or systems without the express written approval of an officer of the company. Life support devices or systems are devices or systems that are intended for surgical implant into the body, or support or sustain life, and whose failure to perform when properly used in accordance with instructions for use provided, can be reasonably expected to result in a significant injury to the user. A critical component is any component of a life support device or system whose failure to perform can be reasonably expected to cause the failure of the life support device or system, or to affect its safety or effectiveness.

AR assumes no liability for applications assistance or customer product design. AR does not warrant or represent that any license, either express or implied, is granted under any patent right, mask work right, or other intellectual property right of AR covering or relating or any combination, machine, or process in which such products or services might be or are used.