Product Specification

Mode: AR-SV6256PS

Port type：SDIO

Version: V1.0

Date：2022-03-15

Shenzhen Every Interconnect Technologies Co., Ltd.

TEL: (0755)23410907

Fax: (0755)23410907

E-mail: guang.ma@every-connect.com

Add: 4 / F, building D, Guangming Zhizao hitech Industrial Park,

ZhenMeiCommunity, Xinhu Street, Guangming District, Shenzhen

Release Record

Version	Release Date	Comments
V1.0	2022-03-15	Init

LIST OF CONTENTS

1 Introduction

1.1 General Description

AR-SV6256PS wireless SDIO module is designed base on SV6256P. It operates at 2.4~2.4835GHz and 5.15~5.85GHz supports IEEE802.11a/b/g/n 1T1R , wireless data rate can reach up to 150Mbps. The SDIO interface complies with SDIO 1.1/2.0 and SPI_SLAVE mode. It supports external antenna, which adapts different kinds of work environment. It's easy and convenient to connect wireless network.

Figure 1 Top View

Figure 2 Bottom View

Note: The above pictures are for reference only the AR-S6256AS1 (The same PCB board).

1.2 Features

- Operating Frequencies : 2.4~2.4835GHz and 5.15~5.85GHz
- Host Interface is SDIO, complies with SDIO 1.1/2.0 and SPI_SLAVE mode
- IEEE Standards : IEEE 802.11a/b/g/n
- Wireless data rate can reach up to150Mbps
- Connect with external antenna through the half hole
- Power Supply:3.3V±0.2V

1.3 Applications

- MID
- IP Camera
- STB
- Smart TV
- E-book
- Other devices which need to be supported by wireless network

2 Functional Block Diagram

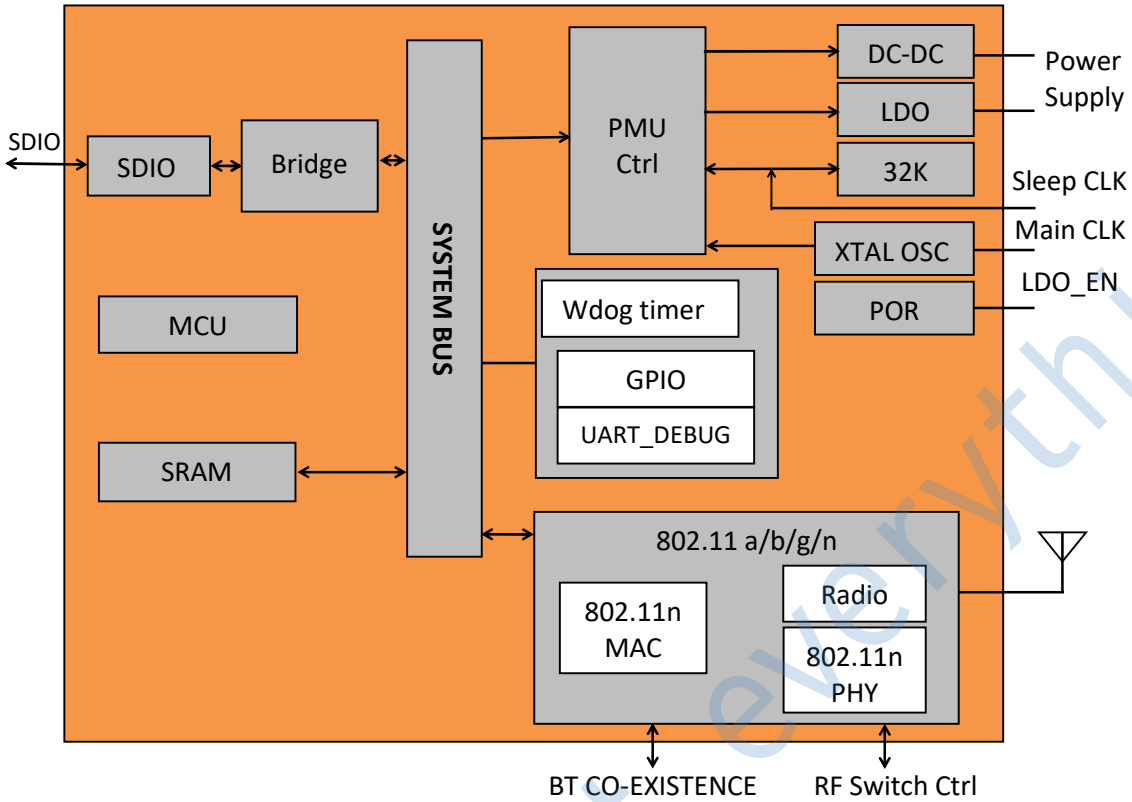

Figure 3 SV6256P block diagram

3 Product Technical Specifications

3.1 General Specifications

Item	Description
Product Name	AR-SV6256PS
Main Chip	SV6256P
Host Interface	SDIO2.0
IEEE Standards	IEEE 802.11a/b/g/n
Operating Frequencies	2.4GHz~2.4835GHz /5.15~5.85Hz
Modulation	802.11b: CCK, DQPSK, DBPSK 802.11a/g: 64-QAM,16-QAM, QPSK, BPSK 802.11n: 64-QAM,16-QAM, QPSK, BPSK
Working Mode	Infrastructure, Ad-Hoc
Wireless Data Rate	802.11b: 1, 2 ,5.5,11Mbps 802.11g: 6,9,12,18,24,36,48,54Mbps 802.11a: 6,9,12,18,24,36,48,54Mbps 802.11n: MCS0~7，HT20 reach up to72.2Mbps； 802.11n: MCS0~7，HT40 reach up to150 Mbps
Rx Sensitivity	-95dBm (Min)

TX Power	18.5dBm (Max)
Antenna Type	Connect with external antenna optional through the half hole
Dimension(L*W*H)	12.0*12.0*1.5mm (L*W*H)，Tolerance: ±0.15mm
Power Supply	3.3V±0.2V
Clock Source	24MHz
Power Consumption	monitor mode 70 mA@3.3V (Max) TX mode 390mA@3.3V (Max)
Working Temperature	-10°C to +50°C
Storage Temperature	-40°C to +70°C

ESD CAUTION:

Although this module is designed to be as robust as possible, Electrostatic Discharge (ESD) can damage this module. It must be protected from ESD at all times and handled under the protection of ESD.

3.2 DC Power Consumption

Vcc=3.3V，Ta = 25 °C，unit: mA				
Supply current	Typ.		Max	
Standby (RF disabled)	40		70	
802.11b	**1Mbps**		**11Mbps**	
Supply current	Typ.	Max.	Typ.	Max.
Continuous TX mode	288	312	290	324
monitor RX mode	60	85	61	85
802.11g	**6Mbps**		**54Mbps**	
Supply current	Typ.	Max.	Typ.	Max.
Continuous TX mode	286	334	253	296
monitor RX mode	61	85	60	69
802.11n HT20	**MCS0**		**MCS7**	
Supply current	Typ.	Max.	Typ.	Max.
Continuous TX mode	288	336	254	292
monitor RX mode	60	84	59	69
802.11n HT40	**MCS0**		**MCS7**	
Supply current	Typ.	Max.	Typ.	Max.
Continuous TX mode	299	340	259	296
monitor RX mode	66	92	85	108
802.11a	**6Mbps**		**54Mbps**	
Supply current	Typ.	Max.	Typ.	Max.
Continuous TX mode	341	380	316	356

RX mode	84.7	108	82.3	90
802.11n HT20(5G)	**MCS0**		**MCS7**	
Supply current	Typ.	Max.	Typ.	Max.
Continuous TX mode	340	384	319	352
RX mode	84	108	83	92
802.11n HT40(5G)	**MCS0**		**MCS7**	
Supply current	Typ.	Max.	Typ.	Max.
Continuous TX mode	347	380	321	356
RX mode	90	116	88	95

3.3 RF Specifications

TX Power&EVM	WiFi-2.4G:802.11b:17±1.5dBm 802.11g:14±1.5dBm 802.11n HT20/HT40:14±1.5dBm WiFi-5G: 802.11a: 13±1.5dBm 802.11n HT20/HT40:13±1.5dBm
TX Power&EVM	802.11b: <-20dB@11Mbps 802.11g: <-27dB@54Mbps 802.11nHT20:< -28dB@65Mbps 802.11nHT40:< -28dB@135Mbps
Receiver Minimum Input Sensitivity@PER	1Mbps: -92dBm@PER<8%; 11Mbps:-86dBm@PER<8%; 54Mbps:-70dBm@PER<10%; 72.2Mbps:-68dBm@PER<10%; 135Mbps:-65dBm@PER<10%;

RF Test Report

Mode	Rate(Mbps)	Power(dBm)			EVM(dB)			Sensitivity(dBm)		
		CH1	CH7	CH13	CH1	CH7	CH13	CH1	CH7	CH13
11b	1	17.52	17.65	17.85	-31.88	-31.89	-31.22	-95	-95	-95
	11	17.54	17.72	17.82	-31.10	-31.51	-31.10	-87	-87	-86
11g	6	17.33	17.23	17.33	-24.51	-23.52	-23.31	-90	-90	-90
	54	14.28	14.24	14.32	-30.82	-30.48	-30.45	-73	-73	-72
11n HT20	MCS0	17.44	17.24	17.32	-23.55	-23.56	-23.57	-89	-89	-89
	MCS7	14.33	14.43	14.35	-30.24	-30.55	-30.44	-70	-70	-69
Mode	Rate(Mbps)	Power(dBm)			EVM(dB)			Sensitivity(dBm)		
		CH3	CH7	CH11	CH3	CH7	CH11	CH3	CH7	CH11
11n HT40	MCS0	17.66	17.66	17.67	-23.26	-23.68	-23.46	-86	-86	-86
	MCS7	14.60	14.71	14.76	-30.60	-30.30	-30.10	-67	-67	-67

5G

Mode	Rate (Mbps)	Power(dBm)				EVM(dB)				Sensitivity(dBm)			
		CH 36	CH1 00	CH 140	CH 161	CH 36	CH100	CH140	CH161	CH 36	CH 100	CH 140	CH 161
11a	6	16.54	16.27	16.45	16.65	-24.53	-23.68	-23.02	-23.09	-89	-89	-89	-89
	54	13.50	13.70	13.18	13.78	-30.11	-30.61	-30.30	-30.10	-72	-72	-72	-71
Mode	Rate (Mbps)	Power(dBm)				EVM(dB)				Sensitivity(dBm)			
		CH 38	CH 102	CH 142	CH 159	CH 38	CH102	CH142	CH159	CH 38	CH 102	CH 142	CH 159
11n 40	MCS0	16.54	16.27	16.45	15.65	-29.53	-29.68	-29.02	-28.39	-86	-86	-86	-86
	MCS7	13.52	13.72	13.41	13.63	-30.03	-30.03	-30.10	-30.10	-65	-65	-65	-65

4 Pin Assignments

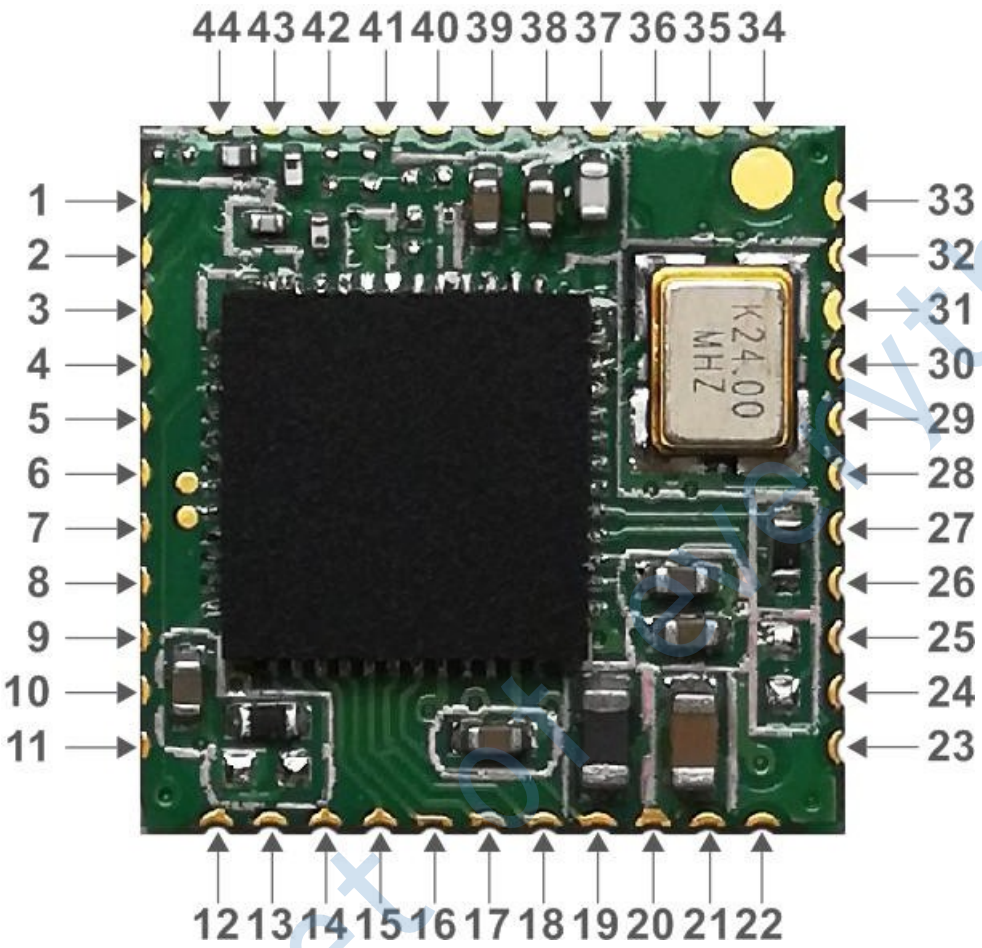

Figure 4 Pin Assignments (Top view)

The following signal type codes are used in the tables:

I:Input O:Output O/D: Open Drain P:Power Pin

Pin No:	Pin Name	Type	Description
1	GND	P	Ground
2	WL_ANT	I/O	WLAN RF pad
3	GND	P	Ground
4~8	NC	/	NC
9	VBAT_IN	P	VDD3.3V power supply
10	NC	/	NC
11	NC	/	NC
12	LDO_EN	I	Reset signal to power down the SV6256P [When **LDO_EN** pin is de-asserted and logically low, the chip is brought to off state immediately.

			After **LDO_EN** pin is asserted, the internal power-on reset (POR) will be done within 1.3 ms.]
13	WiFi_WAKE_BB	O	WLAN to wake-up HOST, [**WiFi_WAKE_BB i**s forbidden to be pull high before power-on reset (POR) is done.]
14	SDIO_D2	I/O	SDIO data 2
15	SDIO_D3	I/O	SDIO data 3
16	SDIO_CMD	I/O	SDIO command
17	SDIO_CLK	I	SDIO clock
18	SDIO_D0	I/O	SDIO data 0
19	SDIO_D1	I/O	SDIO data 1
20	GND	P	Ground
21	NC	/	NC
22	VDDIO	P	VDDIO for SDIO pin, the power supply is same as the signal level of SDIO bus .Base on platform to choose 3.3V or 1.8V.
23~30	NC	/	NC
31	GND	P	Ground
32	NC	/	NC
33	GND	P	Ground
34~35	NC	/	NC
36	GND	P	Ground
37~44	NC	/	NC

5 Application Information

5.1 Typical Application Circuit

RF reference circuit

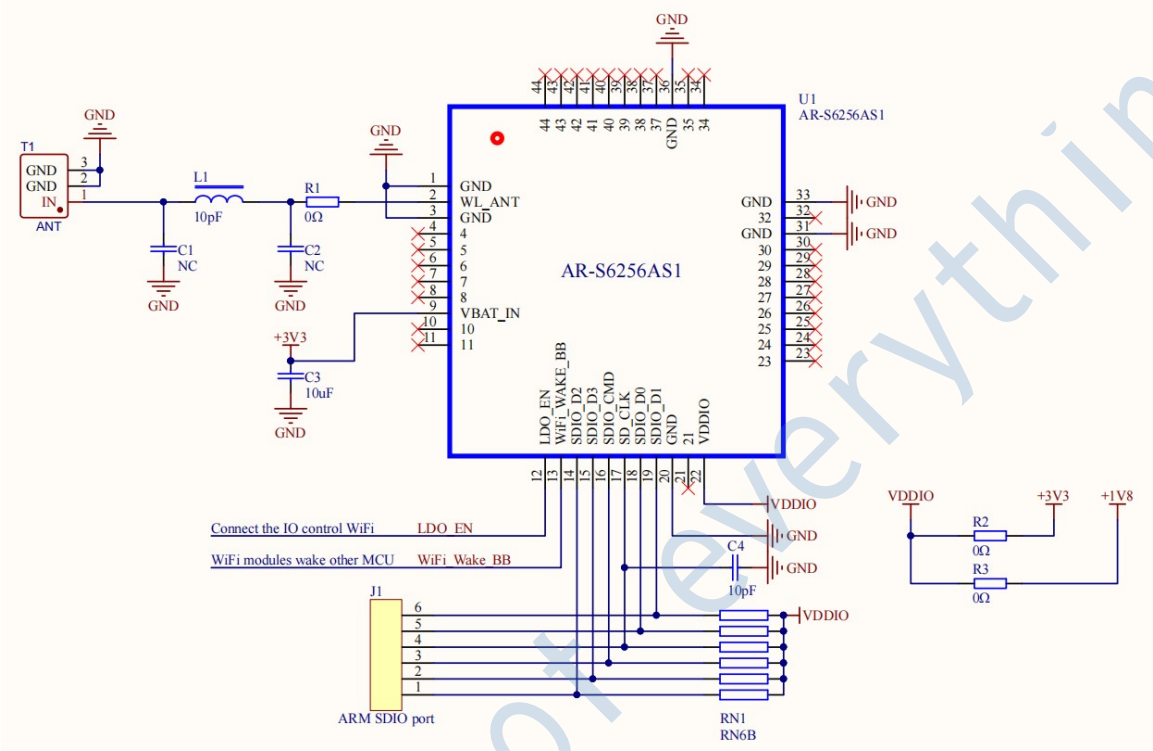

Figure 5 Typical application circuit

NOTE： RF trace need to keep 50 ohm impedance.

6 Mechanical Specifications

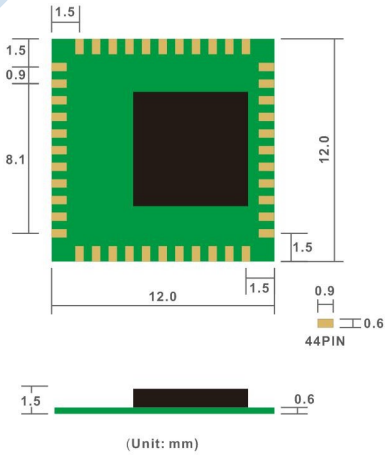

Module dimension: Typical (L*W * H): 13.0mm*12.3mm*1.5mm Tolerance : +/-0.15mm

Figure 6 Module dimension

7 Others

7.1 Package Information

7.2 Storage Temperature and Humidity

1. Storage Condition: Moisture barrier bag must be stored under 30℃, humidity under 85% RH. Humidity indicator cards must be blue, <30%.

2. Products require baking before mounting if humidity indicator cards reads > 30% temp < 30℃, humidity < 70% RH, over 96 hours.Baking condition: 125℃, 12 hours. Baking times: 1 time.

7.3 Recommended Reflow Profile

Reflow soldering shall be done according to the solder reflow profile,Typical Solder Reflow Profile is illustrated in Figures 8. The peak temperature is 245℃.

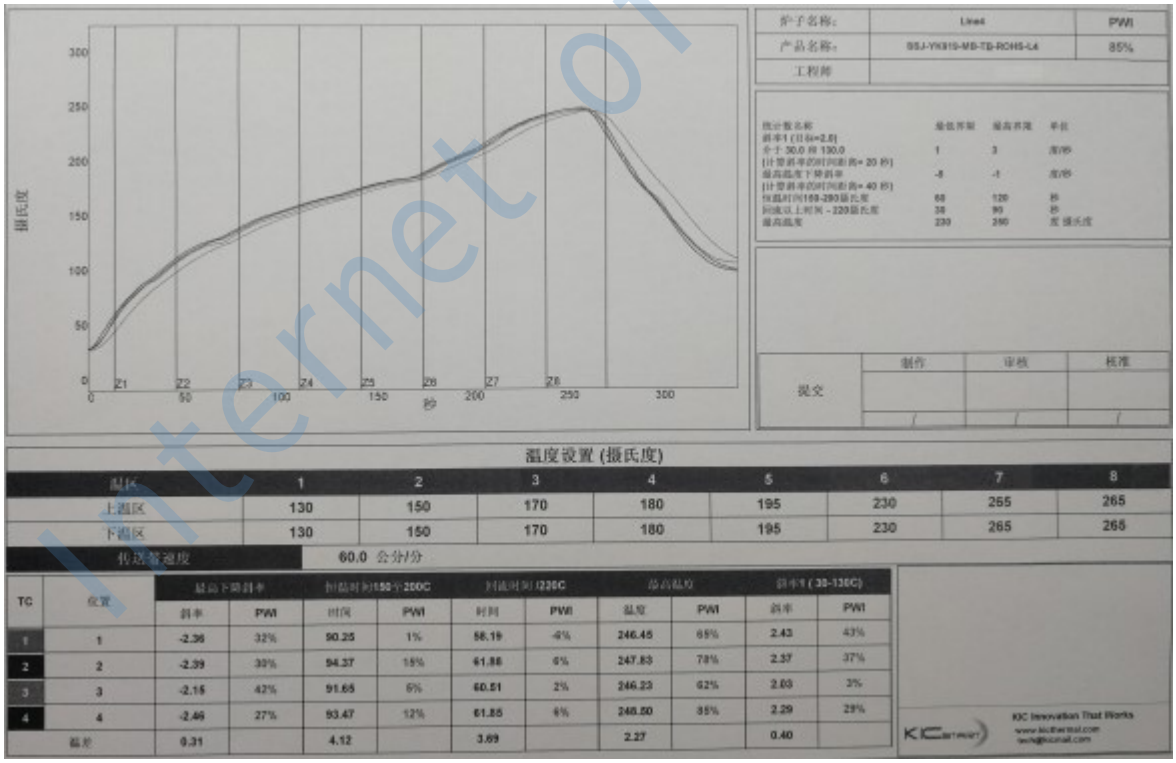

Figure 8 Typical Solder Reflow Profile